Brackets TM 111

TM 111 Cable side - Aluminium and PEHD

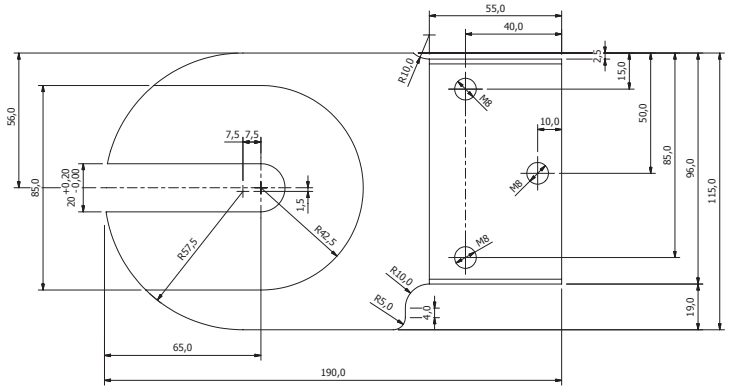

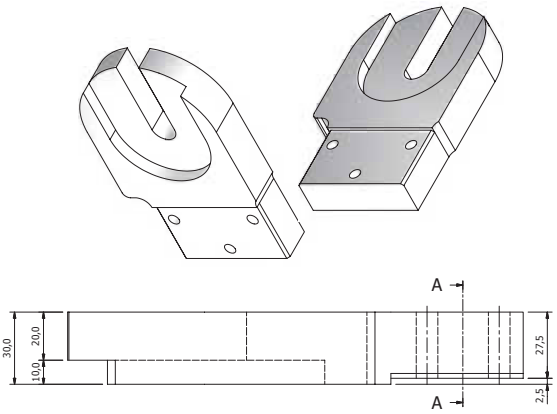

UT 111 Guide drum - Aluminium

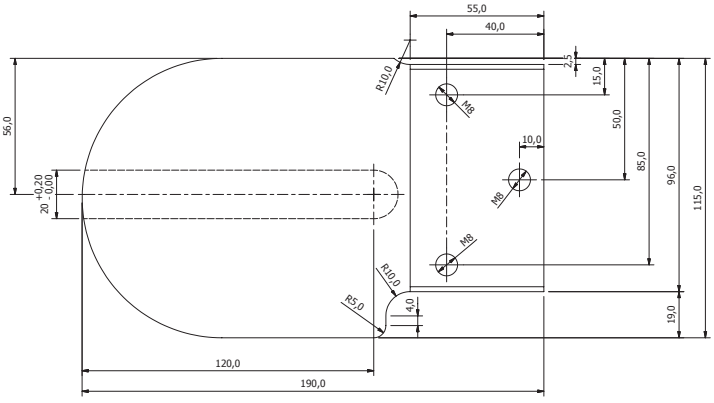

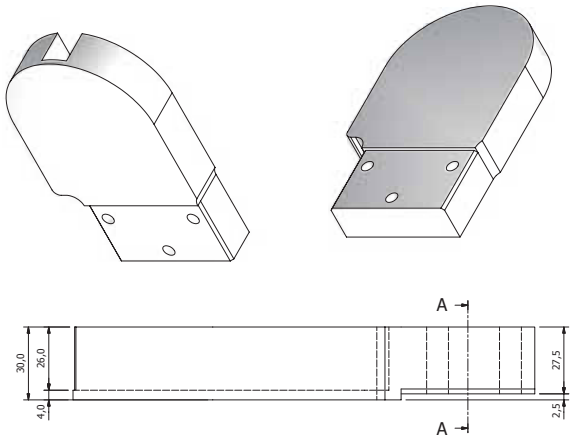

UT 111 Guide drum - PEHD

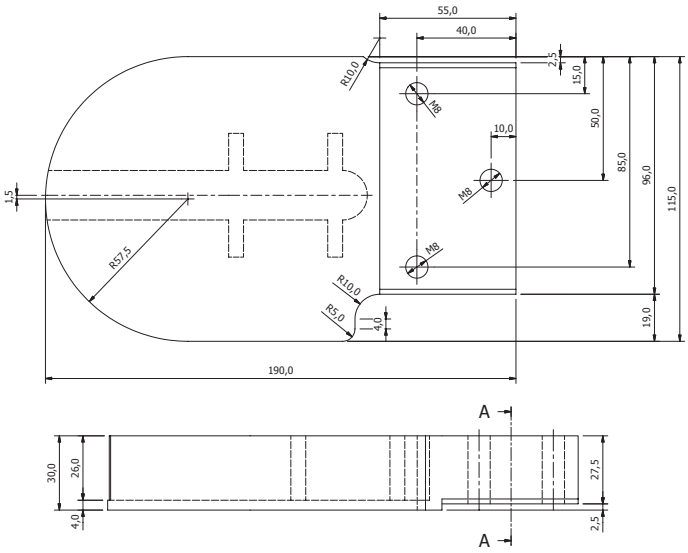

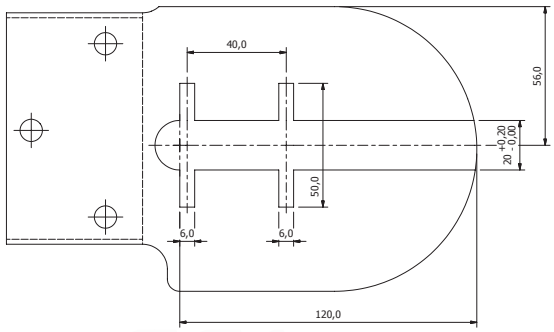

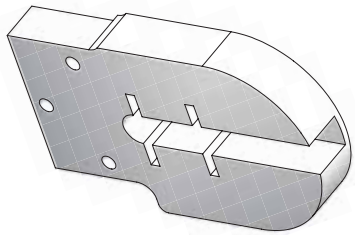

Transmeca Larvik
Sophus Buggesvei 46, 3269 Larvik
Tlf. 33 13 27 00 • Fax 33 13 27 01
postlarvik@transmeca.no

Transmeca Oslo
Strømsveien 228, 0614 Oslo
Tlf. 23 05 11 30 • Fax 23 05 11 40
post@transmeca.no